GIA

GIA REPORT
7506401166

Verify this report at GIA.edu

**FACSIMILE**
This is a digital representation of the original GIA Report. This representation might not be accepted in lieu of the original GIA Report in certain circumstances. The original GIA Report includes certain security features which are not reproducible on this facsimile.

## GIA NATURAL COLORED DIAMOND REPORT

September 30, 2024

Report Type ..... Grading Report

GIA Report Number ..... 7506401166

Shape and Cutting Style ..... Pear Modified Brilliant

Measurements ..... 10.42 x 6.39 x 4.26 mm

Carat Weight ..... 2.12 carat

Color Grade ..... Fancy Intense Yellow

Color Origin ..... Natural

Color Distribution ..... Even

Clarity Grade ..... SI2

Proportions:

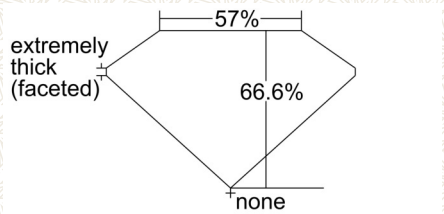


Profile not to actual proportions

Polish ..... Excellent

Symmetry ..... Very Good

Fluorescence ..... Faint

Inscription(s): GIA 7506401166

**Comments:** Additional twinning wisps, pinpoints and surface graining are not shown.

## ADDITIONAL INFORMATION

GIA COLORED DIAMOND SCALE

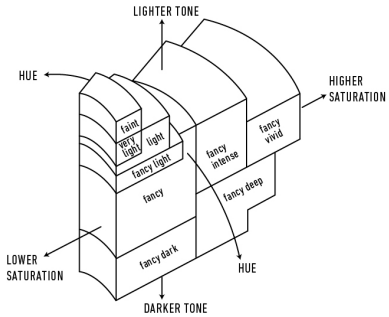


Illustration of GIA fancy color grade interrelationships

GIA CLARITY SCALE

| | |
|---|---|
| | FLAWLESS |
| | INTERNALLY FLAWLESS |
| VERY VERY SLIGHTLY INCLUDED | $VVS_1$ |
| | $VVS_2$ |
| VERY SLIGHTLY INCLUDED | $VS_1$ |
| | $VS_2$ |
| SLIGHTLY INCLUDED | $SI_1$ |
| | $SI_2$ |
| INCLUDED | $I_1$ |
| | $I_2$ |
| | $I_3$ |

CLARITY CHARACTERISTICS

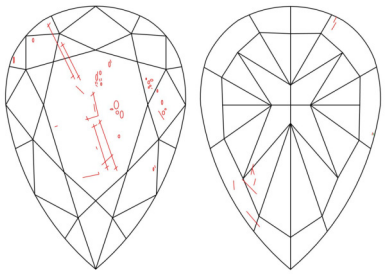

KEY TO SYMBOLS*

- Twinning Wisp
- Indented Natural
- Crystal
- Feather
- Needle

* Red symbols denote internal characteristics (inclusions). Green or black symbols denote external characteristics (blemishes). Diagram is an approximate representation of the diamond, and symbols shown indicate type, position, and approximate size of clarity characteristics. All clarity characteristics may not be shown. Details of finish are not shown.

The results documented in this report refer only to the diamond described, and were obtained using the techniques and equipment available to GIA at the time of examination. This report is not a guarantee or valuation. For additional information and important limitations and disclaimers, please see GIA.edu/terms or call +1 800 421 7250 or +1 760 603 4500.
©2023 Gemological Institute of America, Inc.

reportcheck.gia.edu



THE SECURITY FEATURES IN THIS DOCUMENT, INCLUDING THE HOLOGRAM, SECURITY SCREEN AND MICROPRINT LINES, IN ADDITION TO THOSE NOT LISTED, EXCEED DOCUMENT SECURITY INDUSTRY GUIDELINES.