GIA

GIA REPORT
6175554457

Verify this report at gia.edu

FACSIMILE

This is a digital representation of the original GIA Report. This representation might not be accepted in lieu of the original GIA Report in certain circumstances. The original GIA Report includes certain security features which are not reproducible on this facsimile.

GIA COLORED DIAMOND REPORT

July 28, 2014

Report Type ..... Grading Report

GIA Report Number 6175554457

Shape and Cutting Style ..... Modified Square Brilliant

Measurements ..... 4.37 x 4.35 x 2.88 mm

Carat Weight ..... 0.50 carat

Color Grade ..... Fancy Deep Brown-Pink

Color Origin ..... Natural

Color Distribution ..... Even

Clarity Grade I1

Proportions:

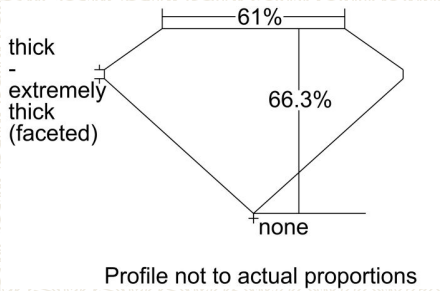

Profile not to actual proportions

Polish ..... Very Good

Symmetry ..... Good

Fluorescence ..... Faint

Comments: Additional clouds are not shown. Pinpoints are not shown.

ADDITIONAL INFORMATION

CLARITY CHARACTERISTICS

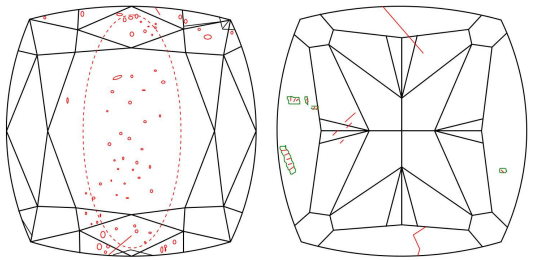

KEY TO SYMBOLS*

- Cloud
- Feather
- Crystal
- Cavity
- Extra Facet

* Red symbols denote internal characteristics (inclusions). Green or black symbols denote external characteristics (blemishes). Diagram is an approximate representation of the diamond, and symbols shown indicate type, position, and approximate size of clarity characteristics. All clarity characteristics may not be shown. Details of finish are not shown.

GIA COLORED DIAMOND SCALE

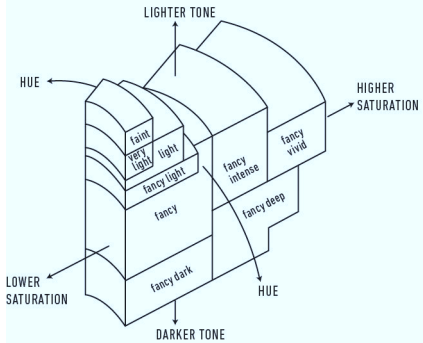

Illustration of GIA fancy color grade interrelationships

GIA CLARITY SCALE

	FLAWLESS
	INTERNALLY FLAWLESS
VERY VERY SLIGHTLY INCLUDED	VVS_1
	VVS_2
VERY SLIGHTLY INCLUDED	VS_1
	VS_2
SLIGHTLY INCLUDED	SI_1
	SI_2
INCLUDED	I_1
	I_2
	I_3

The results documented in this report refer only to the diamond described, and were obtained using the techniques and equipment used by GIA at the time of examination. This report is not a guarantee or valuation. For additional information and important limitations and disclaimers, please see www.gia.edu/terms or call +1 800 421 7250 or +1 760 603 4500.

©2014 Gemological Institute of America, Inc.

reportcheck.gia.edu

THE SECURITY FEATURES IN THIS DOCUMENT, INCLUDING THE HOLOGRAM, SECURITY SCREEN AND MICROPRINT LINES, IN ADDITION TO THOSE NOT LISTED, EXCEED DOCUMENT SECURITY INDUSTRY GUIDELINES.