GIA

GIA REPORT
6552544365

Verify this report at GIA.edu

FACSIMILE
This is a digital representation of the original GIA Report. This representation might not be accepted in lieu of the original GIA Report in certain circumstances. The original GIA Report includes certain security features which are not reproducible on this facsimile.

GIA NATURAL COLORED DIAMOND REPORT

July 10, 2026

Report Type ..... Grading Report
GIA Report Number 6552544365
Shape and Cutting Style ..... Cushion Modified Brilliant
Measurements ..... 5.85 x 5.08 x 3.52 mm

Carat Weight ..... 1.01 carat
Color Grade ..... Fancy Light Yellow
Color Origin ..... Natural
Color Distribution ..... Even
Clarity Grade VS1
Proportions:

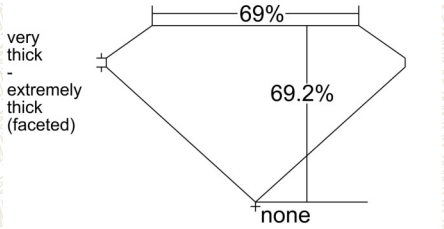

Profile not to actual proportions

Polish ..... Excellent
Symmetry ..... Very Good
Fluorescence ..... None
Inscription(s): GIA 6552544365

ADDITIONAL INFORMATION

GIA COLORED DIAMOND SCALE

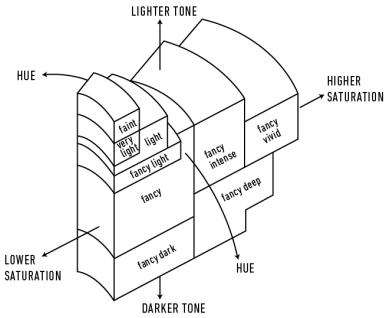

Illustration of GIA fancy color grade interrelationships

GIA CLARITY SCALE



CLARITY CHARACTERISTICS

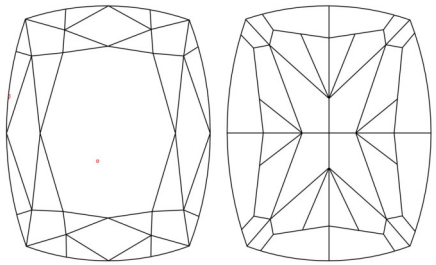

KEY TO SYMBOLS*

○ Crystal
Feather

* Red symbols denote internal characteristics (inclusions). Green or black symbols denote external characteristics (blemishes). Diagram is an approximate representation of the diamond, and symbols shown indicate type, position, and approximate size of clarity characteristics. All clarity characteristics may not be shown. Details of finish are not shown.

The results documented in this report refer only to the diamond described, and were obtained using the techniques and equipment available to GIA at the time of examination. This report is not a guarantee or valuation. For additional information and important limitations and disclaimers, please see GIA.edu/terms or call +1 800 421 7250 or +1 760 603 4500.
©2023 Gemological Institute of America, Inc.

reportcheck.gia.edu

THE SECURITY FEATURES IN THIS DOCUMENT, INCLUDING THE HOLOGRAM, SECURITY SCREEN AND MICROPRINT LINES, IN ADDITION TO THOSE NOT LISTED, EXCEED DOCUMENT SECURITY INDUSTRY GUIDELINES.