GIA REPORT
6234181737

Verify this report at GIA.edu

FACSIMILE

This is a digital representation of the original GIA Report. This representation might not be accepted in lieu of the original GIA Report in certain circumstances. The original GIA Report includes certain security features which are not reproducible on this facsimile.

GIA NATURAL COLORED DIAMOND REPORT

February 06, 2024

Report Type .....Identification and Origin Report

GIA Report Number 6234181737

Shape and Cutting Style ..... Cushion Modified Brilliant

Measurements ..... 3.25 x 3.00 x 2.00 mm

Carat Weight ..... 0.19 carat

Color Grade ..... Fancy Brownish Pink

Color Origin ..... Natural

Color Distribution ..... Even

Inscription(s): GIA 6234181737

ADDITIONAL INFORMATION

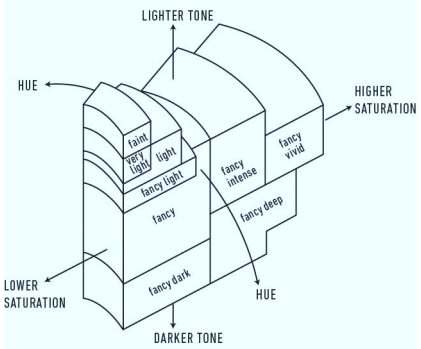

Illustration of GIA fancy color grade interrelationships

The results documented in this report refer only to the diamond described, and were obtained using the techniques and equipment available to GIA at the time of examination. For additional information and important limitations and disclaimers, please see GIA.edu/terms or call +1 800 421 7250 or +1 760 603 4500.
©2023 Gemological Institute of America, Inc.

reportcheck.gia.edu

THE SECURITY FEATURES IN THIS DOCUMENT, INCLUDING THE HOLOGRAM, SECURITY SCREEN AND MICROPRINT LINES, IN ADDITION TO THOSE NOT LISTED, EXCEED DOCUMENT SECURITY INDUSTRY GUIDELINES.