GIA

GIA REPORT
*****27411

Verify this report at GIA.edu

FACSIMILE

This is a digital representation of the original GIA Report. This representation might not be accepted in lieu of the original GIA Report in certain circumstances. The original GIA Report includes certain security features which are not reproducible on this facsimile.

GIA NATURAL COLORED DIAMOND REPORT

March 25, 2025

Report Type ..... Grading Report

GIA Report Number *****27411

Shape and Cutting Style ..... Cut-Cornered Rectangular Modified Brilliant

Measurements ..... 8.96 x 7.18 x 5.08 mm

Carat Weight ..... 3.22 carat

Color Grade ..... Light Pinkish Brown

Color Origin ..... Natural

Color Distribution ..... Not Applicable

Clarity Grade ..... Internally Flawless

Proportions:

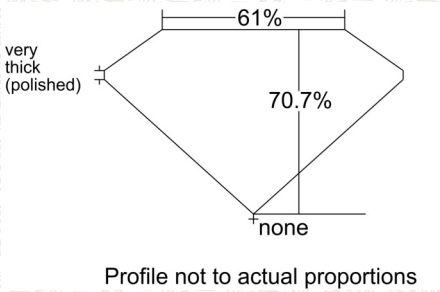

Polish ..... Excellent

Symmetry ..... Excellent

Fluorescence ..... None

Comments: Minor details of polish are not shown.

Note: The report number is masked with ***** for security.

ADDITIONAL INFORMATION

GIA COLORED DIAMOND SCALE

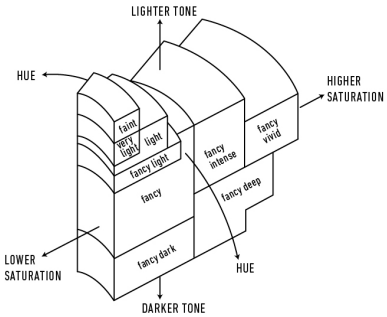

Illustration of GIA fancy color grade interrelationships

GIA CLARITY SCALE

CLARITY CHARACTERISTICS

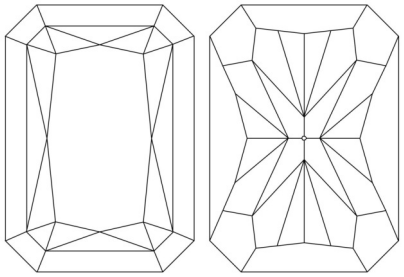

reportcheck.gia.edu

The results documented in this report refer only to the diamond described, and were obtained using the techniques and equipment available to GIA at the time of examination. This report is not a guarantee or valuation. For additional information and important limitations and disclaimers, please see GIA.edu/terms or call +1 800 421 7250 or +1 760 603 4500. ©2023 Gemological Institute of America, Inc.

THE SECURITY FEATURES IN THIS DOCUMENT, INCLUDING THE HOLOGRAM, SECURITY SCREEN AND MICROPRINT LINES, IN ADDITION TO THOSE NOT LISTED, EXCEED DOCUMENT SECURITY INDUSTRY GUIDELINES.