GIA®

GIA REPORT

******1393

Verify this report at GIA.edu

**FACSIMILE**

This is a digital representation of the original GIA Report. This representation might not be accepted in lieu of the original GIA Report in certain circumstances. The original GIA Report includes certain security features which are not reproducible on this facsimile.

## GIA NATURAL DIAMOND GRADING REPORT

February 09, 2026

GIA Report Number ..... ****** 1393

Shape and Cutting Style ..... Round Brilliant

Measurements ..... 6.17 - 6.24 x 4.03 mm

## GRADING RESULTS

Carat Weight ..... 1.00 carat

Color Grade ..... H

Clarity Grade ..... VS1

Cut Grade ..... Very Good

## ADDITIONAL GRADING INFORMATION

Polish ..... Excellent

Symmetry ..... Very Good

Fluorescence ..... None

Inscription(s): GIA ****** 1393

**Comments:** Clouds are not shown.

GIA.edu

## PROPORTIONS

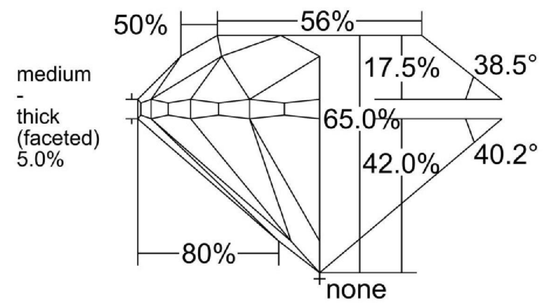


Profile to actual proportions

## CLARITY CHARACTERISTICS

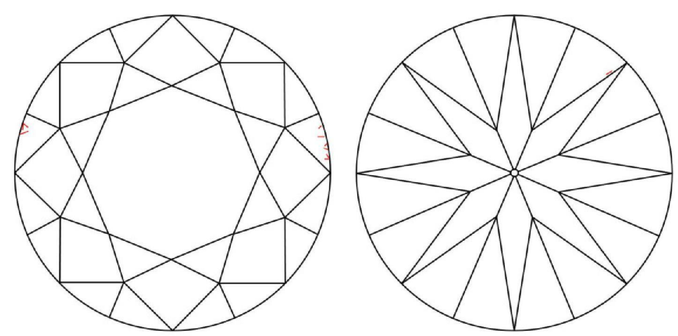

KEY TO SYMBOLS*

Feather

* Red symbols denote internal characteristics (inclusions). Green or black symbols denote external characteristics (blemishes). Diagram is an approximate representation of the diamond, and symbols shown indicate type, position, and approximate size of clarity characteristics. All clarity characteristics may not be shown. Details of finish are not shown.

## GRADING SCALES

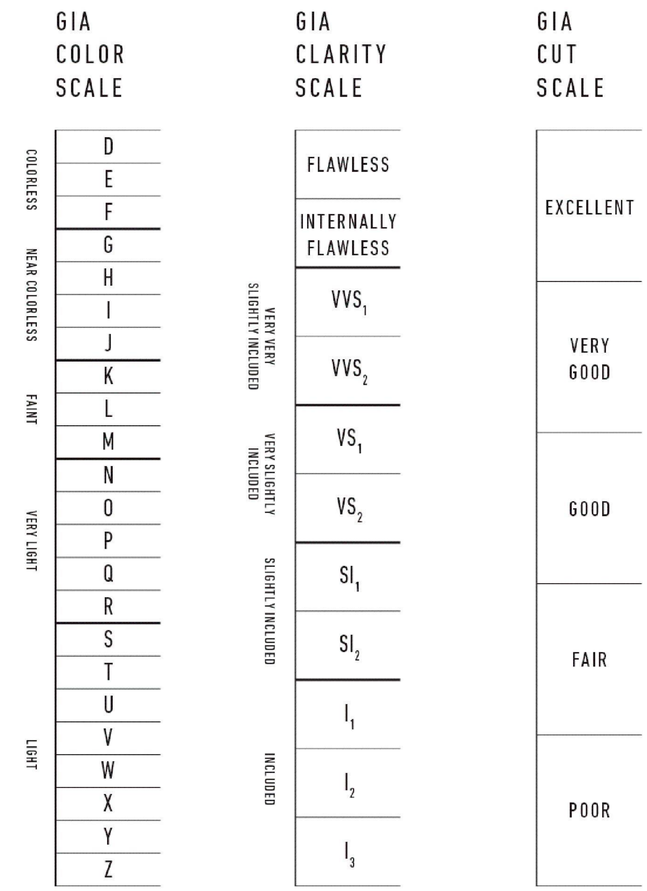


reportcheck.gia.edu

The results documented in this report refer only to the diamond described, and were obtained using the techniques and equipment available to GIA at the time of examination. This report is not a guarantee or valuation. For additional information and important limitations and disclaimers, please see GIA.edu/terms or call +1 800 421 7250 or +1 760 603 4500.

©2023 Gemological Institute of America, Inc.



THE SECURITY FEATURES IN THIS DOCUMENT, INCLUDING THE HOLOGRAM, SECURITY SCREEN AND MICROPRINT LINES, IN ADDITION TO THOSE NOT LISTED, EXCEED DOCUMENT SECURITY INDUSTRY GUIDELINES.