GIA REPORT
****** 1875

Verify this report at GIA.edu

FACSIMILE

This is a digital representation of the original GIA Report. This representation might not be accepted in lieu of the original GIA Report in certain circumstances. The original GIA Report includes certain security features which are not reproducible on this facsimile.

GIA NATURAL COLORED DIAMOND REPORT

December 23, 2025

Report Type ..... Grading Report

GIA Report Number ..... ****** 1875

Shape and Cutting Style ..... Oval Brilliant

Measurements ..... 8.57 x 6.28 x 4.12 mm

Carat Weight ..... 1.50 carat

Color Grade ..... Fancy Yellow

Color Origin ..... Natural

Color Distribution ..... Even

Clarity Grade SI2

Proportions:

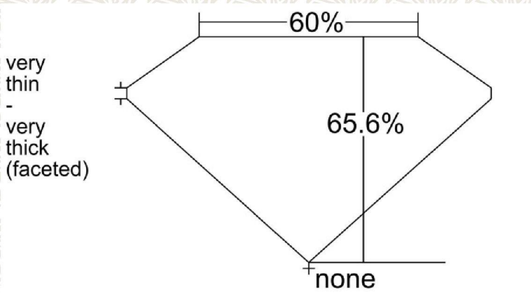

Profile not to actual proportions

Polish ..... Excellent

Symmetry ..... Very Good

Fluorescence ..... Strong Yellow

Inscription(s): GIA ****** 1875

Comments: Clouds, pinpoints and surface graining are not shown.

ADDITIONAL INFORMATION

GIA COLORED DIAMOND SCALE

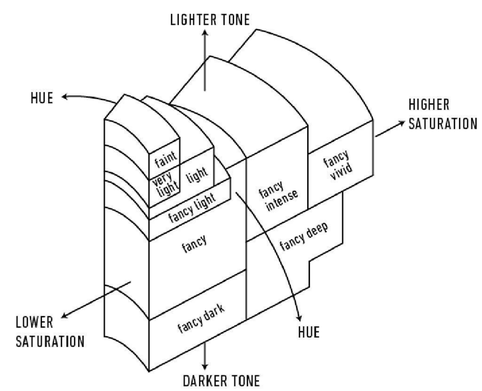

Illustration of GIA fancy color grade interrelationships

GIA CLARITY SCALE

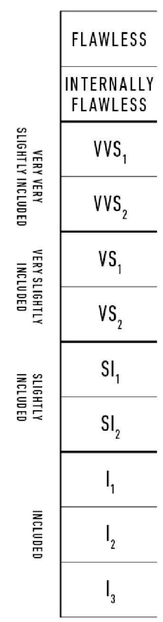

CLARITY CHARACTERISTICS

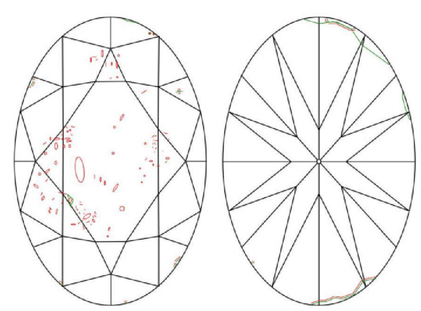

KEY TO SYMBOLS*

- Crystal
- Cavity
- Feather
- Indented Natural
- Needle
- Etch Channel
- Natural

* Red symbols denote internal characteristics (inclusions). Green or black symbols denote external characteristics (blemishes). Diagram is an approximate representation of the diamond, and symbols shown indicate type, position, and approximate size of clarity characteristics. All clarity characteristics may not be shown. Details of finish are not shown.

reportcheck.gia.edu

The results documented in this report refer only to the diamond described, and were obtained using the techniques and equipment available to GIA at the time of examination. This report is not a guarantee or valuation. For additional information and important limitations and disclaimers, please see GIA.edu/terms or call +1 800 421 7250 or +1 760 603 4500. ©2023 Gemological Institute of America, Inc.

THE SECURITY FEATURES IN THIS DOCUMENT, INCLUDING THE HOLOGRAM, SECURITY SCREEN AND MICROPRINT LINES, IN ADDITION TO THOSE NOT LISTED, EXCEED DOCUMENT SECURITY INDUSTRY GUIDELINES.