GIA

GIA REPORT
2225697457

Verify this report at GIA.edu

FACSIMILE
This is a digital representation of the original GIA Report. This representation might not be accepted in lieu of the original GIA Report in certain circumstances. The original GIA Report includes certain security feautres which are not reproducible on this facsimile.

GIA NATURAL COLORED DIAMOND ORIGIN REPORT

January 23, 2023

Report Type ..... Origin Report

GIA Report Number 2225697457

Shape and Cutting Style ..... Cushion Modified Brilliant

Measurements ..... 8.39 x 6.92 x 5.77 mm

Carat Weight ..... 3.18 carat

Color Grade ..... Fancy Light Green-Yellow

Color Origin ..... Natural

Color Distribution ..... Even

Clarity Grade I1

Proportions:

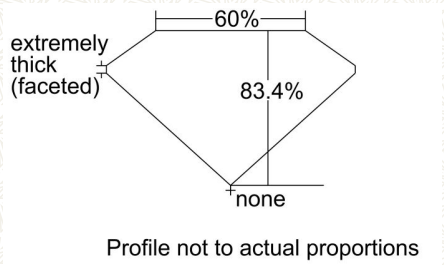

Polish ..... Very Good

Symmetry ..... Good

Fluorescence ..... Strong Blue

Inscription(s): GIA 2225697457

Comments: Clouds, pinpoints and surface graining are not shown. Diamonds from the Argyle mine in the East Kimberley of West Australia, (Rough# 2221495424).

ADDITIONAL INFORMATION

GIA COLORED DIAMOND SCALE

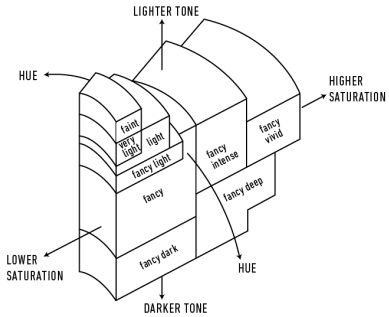

Illustration of GIA fancy color grade interrelationships

GIA CLARITY SCALE

CLARITY CHARACTERISTICS

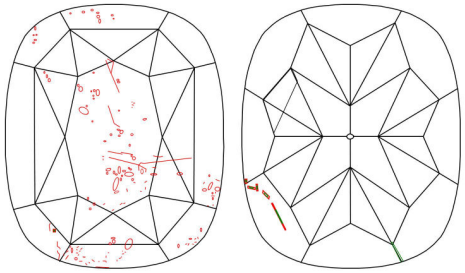

KEY TO SYMBOLS*

- Crystal
- Feather
- Etch Channel
- Needle
- Natural
- Extra Facet

* Red symbols denote internal characteristics (inclusions). Green or black symbols denote external characteristics (blemishes). Diagram is an approximate representation of the diamond, and symbols shown indicate type, position, and approximate size of clarity characteristics. All clarity characteristics may not be shown. Details of finish are not shown.

ORIGIN RESULTS

Country of Origin ◊ ..... Australia

◊ Origin is determined via documentary evidence from the miner. Scientific matching of rough to polished performed by GIA.

reportcheck.gia.edu

The results documented in this report refer only to the diamond described, and were obtained using the techniques and equipment available to GIA at the time of examination. This report is not a guarantee or valuation. For additional information and important limitations and disclaimers, please see GIA.edu/terms or call +1 800 421 7250 or +1 760 603 4500.

©2023 Gemological Institute of America, Inc.

THE SECURITY FEATURES IN THIS DOCUMENT, INCLUDING THE HOLOGRAM, SECURITY SCREEN AND MICROPRINT LINES, IN ADDITION TO THOSE NOT LISTED, EXCEED DOCUMENT SECURITY INDUSTRY GUIDELINES.