GIA

GIA REPORT
2215235720

Verify this report at GIA.edu

FACSIMILE
This is a digital representation of the original GIA Report. This representation might not be accepted in lieu of the original GIA Report in certain circumstances. The original GIA Report includes certain security feautres which are not reproducible on this facsimile.

GIA NATURAL COLORED DIAMOND ORIGIN REPORT

November 19, 2020

Report Type ..... Origin Report

GIA Report Number 2215235720

Shape and Cutting Style ..... Cushion Modified Brilliant

Measurements ..... 13.76 x 12.31 x 9.65 mm

Carat Weight ..... 15.02 carat

Color Grade ..... Fancy Light Grayish Greenish Yellow

Color Origin ..... Natural

Color Distribution ..... Even

Clarity Grade SI2

Proportions:

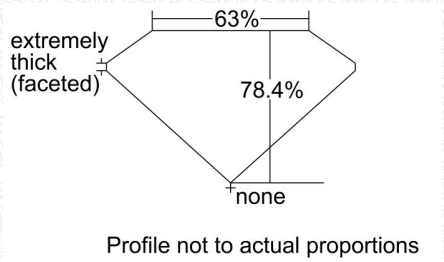

Polish ..... Excellent

Symmetry ..... Good

Fluorescence ..... None

Inscription(s): GIA 2215235720

Comments: Clouds, pinpoints, surface graining and additional extra facets are not shown. Rough# 2215105933.

ADDITIONAL INFORMATION

GIA COLORED DIAMOND SCALE

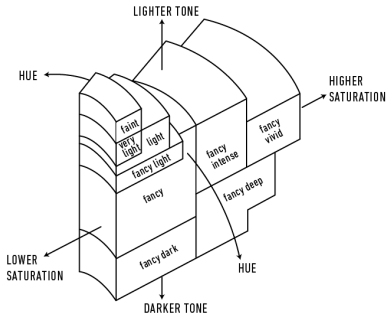

Illustration of GIA fancy color grade interrelationships

GIA CLARITY SCALE

CLARITY CHARACTERISTICS

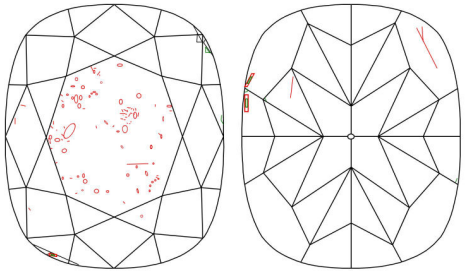

KEY TO SYMBOLS*

- Crystal
- Feather
- Etch Channel
- Needle
- Natural
- Extra Facet

* Red symbols denote internal characteristics (inclusions). Green or black symbols denote external characteristics (blemishes). Diagram is an approximate representation of the diamond, and symbols shown indicate type, position, and approximate size of clarity characteristics. All clarity characteristics may not be shown. Details of finish are not shown.

ORIGIN RESULTS

Country of Origin* ..... Australia

*Provenance of rough diamond is provided by producer. Rough to polish verified by GIA laboratory.

The results documented in this report refer only to the diamond described, and were obtained using the techniques and equipment available to GIA at the time of examination. This report is not a guarantee or valuation. For additional information and important limitations and disclaimers, please see GIA.edu/terms or call +1 800 421 7250 or +1 760 603 4500. ©2019 Gemological Institute of America, Inc.

reportcheck.gia.edu

THE SECURITY FEATURES IN THIS DOCUMENT, INCLUDING THE HOLOGRAM, SECURITY SCREEN AND MICROPRINT LINES, IN ADDITION TO THOSE NOT LISTED, EXCEED DOCUMENT SECURITY INDUSTRY GUIDELINES.